Slimline Roof Lantern - FIXED PITCH 25°
Crucial Measurements

RLD-002 Rev 1.2 (010519)

ROOF LANTERN STOCK SIZE
'CRUCIAL MEASUREMENT'

Roof Lantern sizes shown are **external sizes** and are measured to here

FULLY WEATHERED UPSTAND **MUST NOT** EXCEED THIS MEASUREMENT!

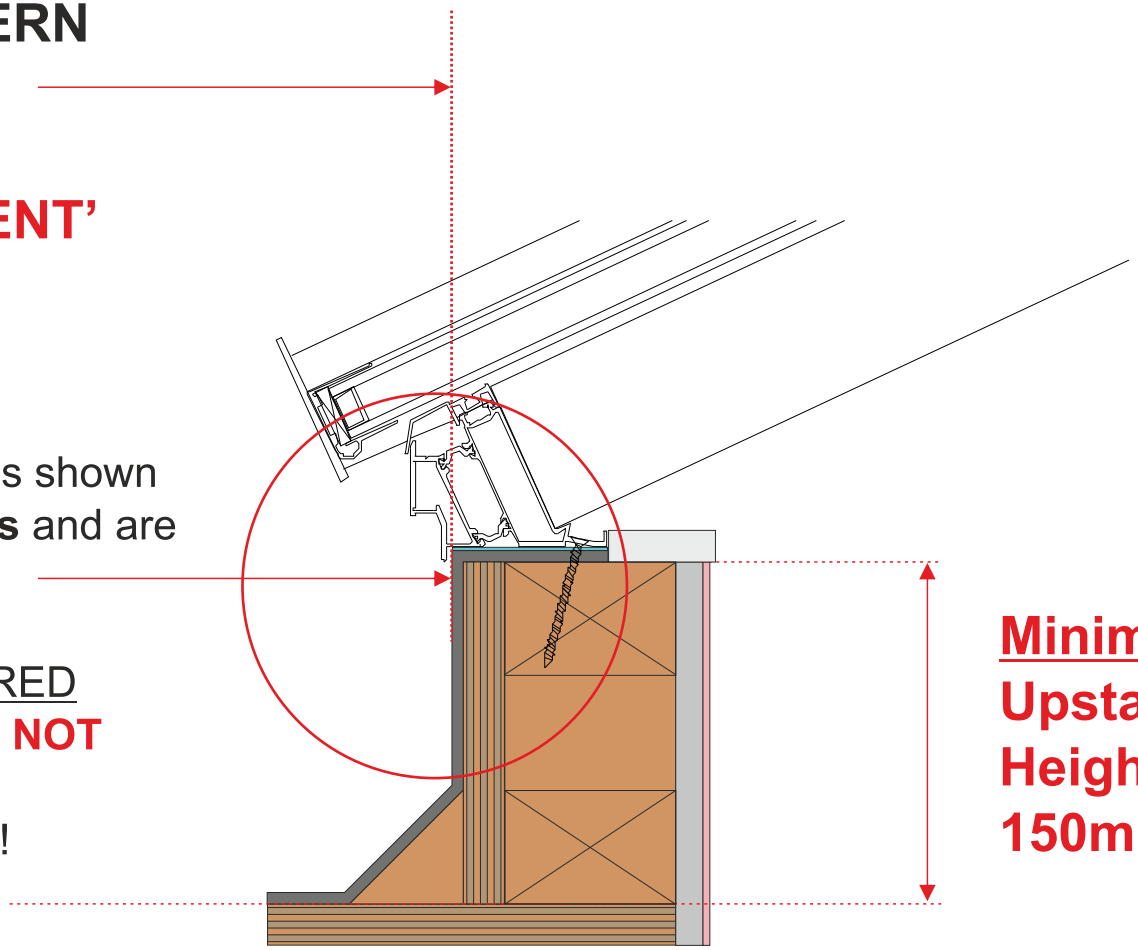

Minimum Upstand Height 150mm

Please Note:
Your fully weathered upstand should be at least 10mm smaller on each proportion than the size of roof lantern ordered, this is to allow for a fitting tolerance.